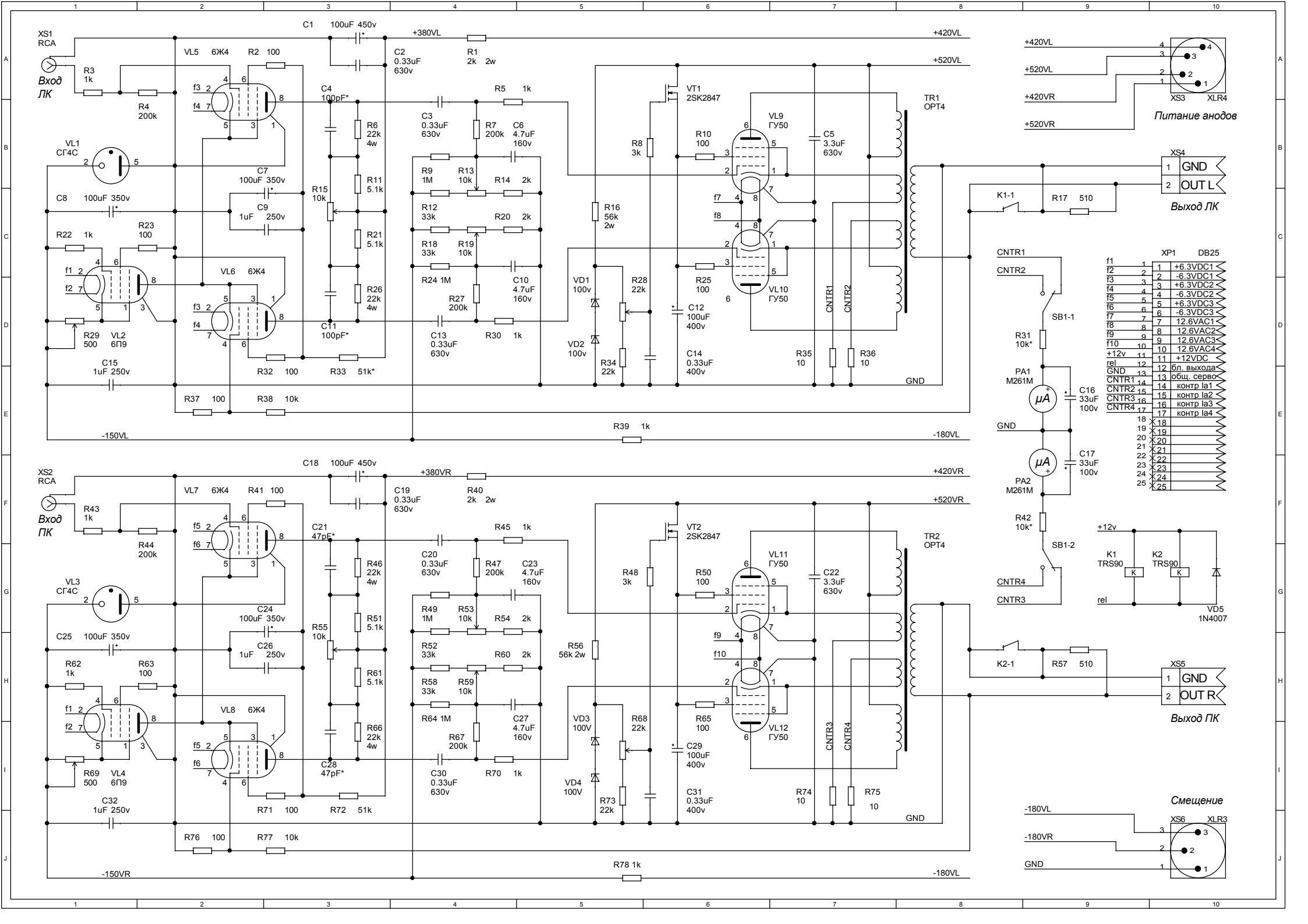
XS1
RCA
Вход
ЛК
R3
1k
R4
200k
VL5 6Ж4
R2 100
C1 100uF 450v
+380VL
C2
0.33uF
630v
R1
2k 2w
+420VL
+520VL
C4
100pF*
R5 1k
C3
0.33uF
630v
R7
200k
C6
4.7uF
160v
R6
22k
4w
R11
5.1k
R21
5.1k
R26
22k
4w
R15
10k
VL1
СГ4С
C7
100uF 350v
C9
1uF 250v
C8 100uF 350v
R22 1k
R23
100
VL6 6Ж4
R29
500
VL2
6П9
C15
1uF 250v
C11
100pF*
R32 100
R33 51k*
R37 100
R38 10k
-150VL
R9
1M
R13
10k
R14 2k
R12
33k
R20 2k
R18
33k
R19
10k
R24 1M
R27
200k
C10
4.7uF
160v
C13
0.33uF
630v
R30 1k
R16
56k
2w
VD1
100v
VD2
100v
R34
22k
R28
22k
R8
3k
VT1
2SK2847
R10
100
R25
100
C12
100uF
400v
C14
0.33uF
400v
VL9
ГУ50
VL10
ГУ50
C5
3.3uF
630v
CNTR1
CNTR2
R35
10
R36
10
TR1
OPT4
GND
R39 1k
-180VL
+420VL
+520VL
+420VR
+520VR
XS3
XLR4
Питание анодов
XS4
GND
OUT L
Выход ПК
K1-1
R17 510
CNTR1
CNTR2
SB1-1
R31
10k*
PA1
M261M
C16
33uF
100v
GND
C17
33uF
100v
PA2
M261M
R42
10k*
SB1-2
CNTR4
CNTR3
XP1 DB25
f1 1 +6.3VDC1
f2 2 -6.3VDC1
f3 3 +6.3VDC2
f4 4 -6.3VDC2
f5 5 +6.3VDC3
f6 6 -6.3VDC3
f7 7 12.6VAC1
f8 8 12.6VAC2
f9 9 12.6VAC3
f10 10 12.6VAC4
+12v 11 +12VDC
rel 12 бл. выхода
GND 13 общ. серво
CNTR1 14 контр Ia1
CNTR2 15 контр Ia2
CNTR3 16 контр Ia3
CNTR4 17 контр Ia4
18
19
20
21
22
23
24
25
+12v
K1
TRS90
K2
TRS90
rel
VD5
1N4007
XS2
RCA
Вход
ПК
R43
1k
R44
200k
VL7 6Ж4
R41 100
C18 100uF 450v
+380VR
C19
0.33uF
630v
R40
2k 2w
+420VR
+520VR
C21
47pF*
R45 1k
C20
0.33uF
630v
R47
200k
C23
4.7uF
160v
R46
22k
4w
R51
5.1k
R61
5.1k
R66
22k
4w
R55
10k
VL3
СГ4С
C24
100uF 350v
C26
1uF 250v
C25 100uF 350v
R62
1k
R63
100
VL8 6Ж4
R69
500
VL4
6П9
C32
1uF 250v
C28
47pF*
R71 100
R72 51k
R76 100
R77 10k
-150VR
R49
1M
R53
10k
R54 2k
R52
33k
R60 2k
R58
33k
R59
10k
R64 1M
R67
200k
C27
4.7uF
160v
C30
0.33uF
630v
R70 1k
R56
56k 2w
VD3
100V
VD4
100V
R73
22k
R68
22k
R48
3k
VT2
2SK2847
R50
100
R65
100
C29
100uF
400v
C31
0.33uF
400v
VL11
ГУ50
VL12
ГУ50
C22
3.3uF
630v
CNTR3
CNTR4
R74
10
R75
10
TR2
OPT4
GND
R78 1k
-180VL
K2-1
R57 510
XS5
GND
OUT R
Выход ПК
Смещение
-180VL
-180VR
GND
XS6
XLR3